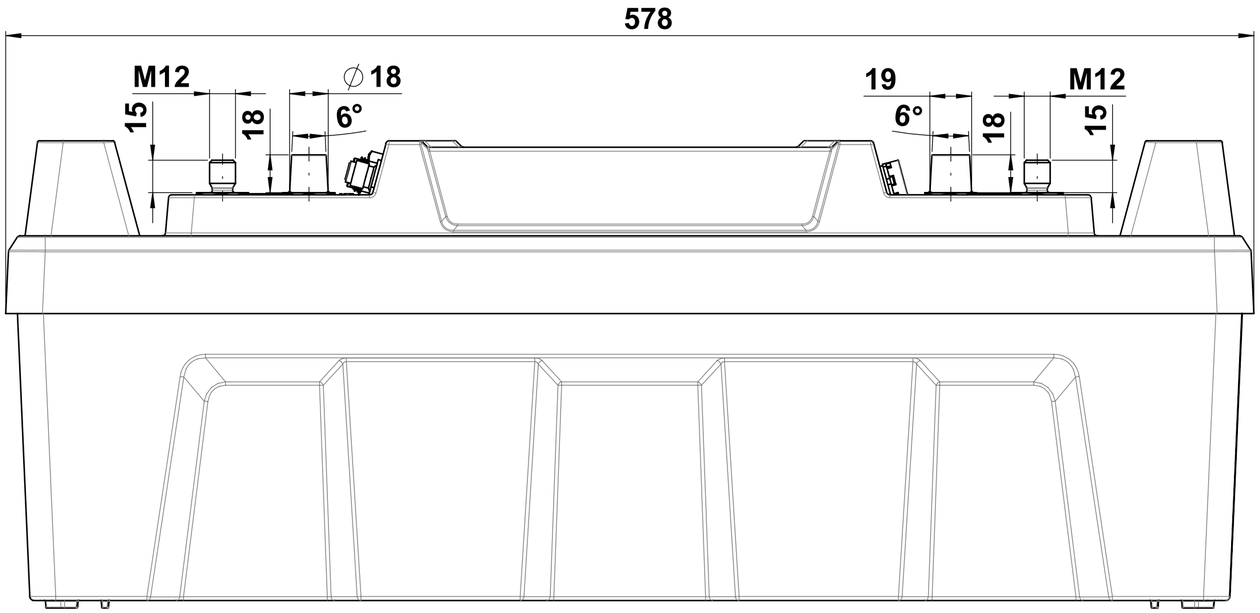

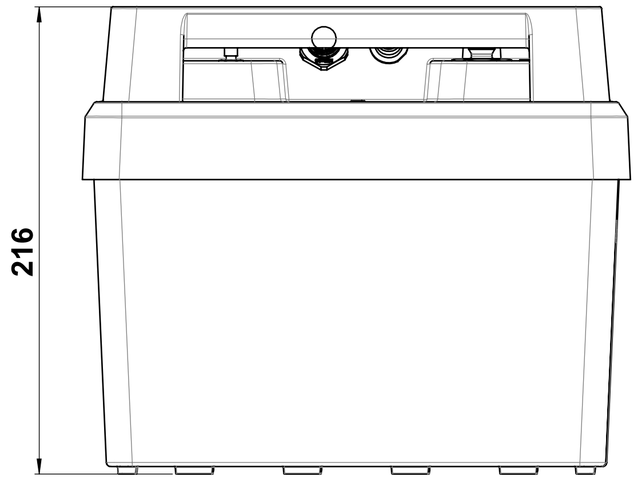

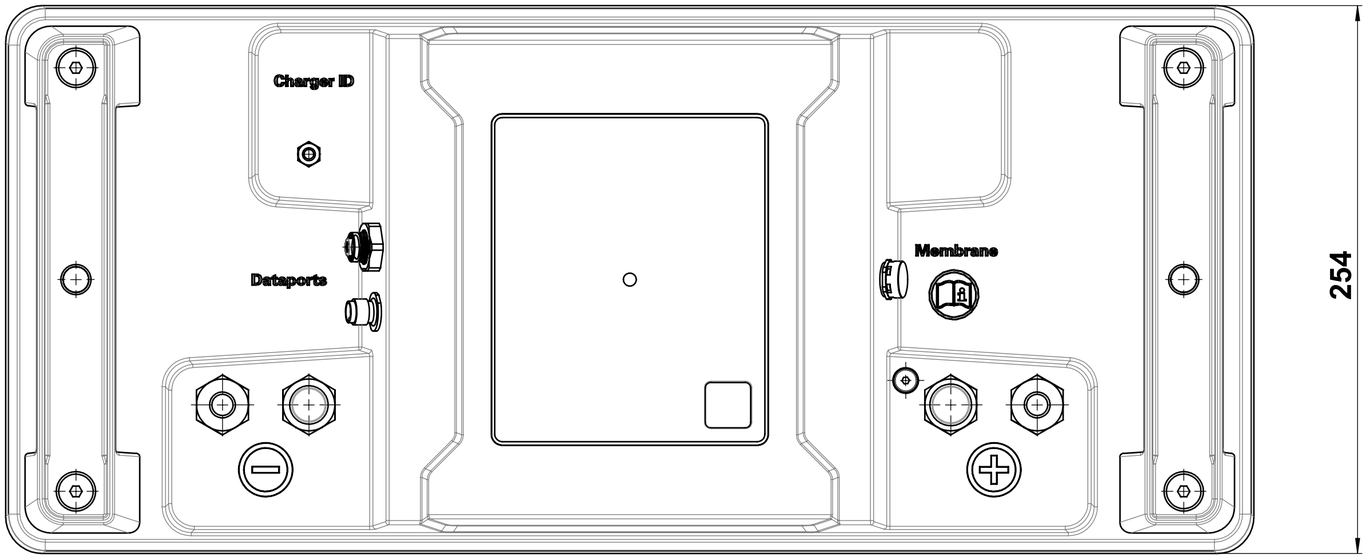

Torqeedo Power 26-104 and Power 24-3500